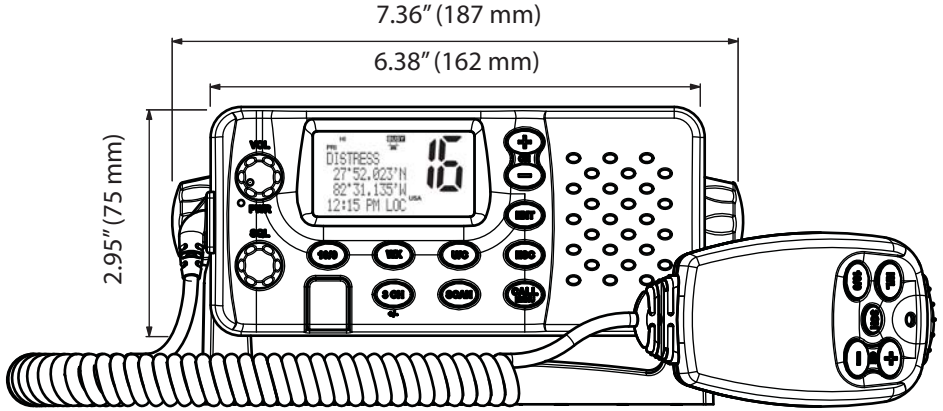
7.36″ (187 mm)
6.38″ (162 mm)
2.95″ (75 mm)
DISTRESS
27°52.023'N
82°31.135'W
12:15 PM LOC
16

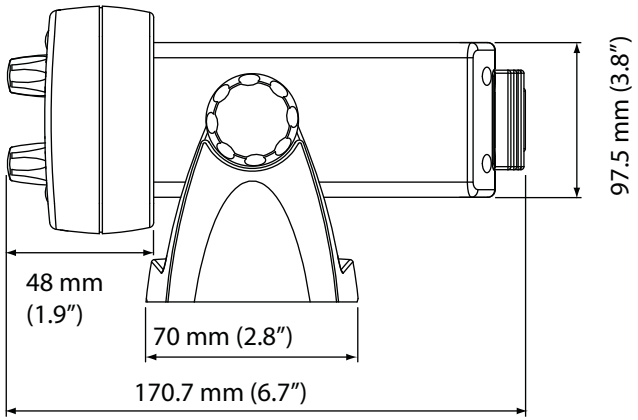
97.5 mm (3.8″)
48 mm
(1.9″)
70 mm (2.8″)
170.7 mm (6.7″)